edesa

SURFACE **RECESSING**

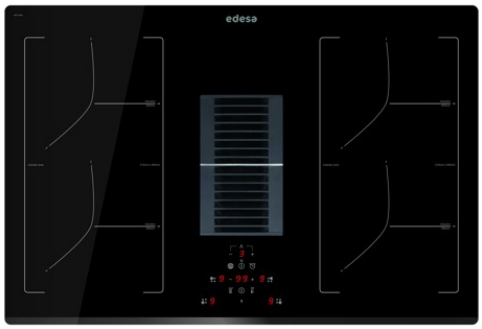

EIT-7422 DD B

Cod. **922272058** EAN **8422248109659**

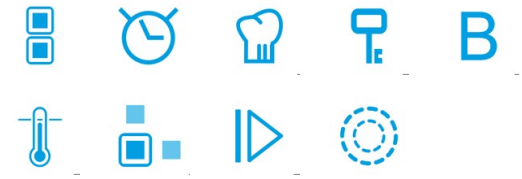

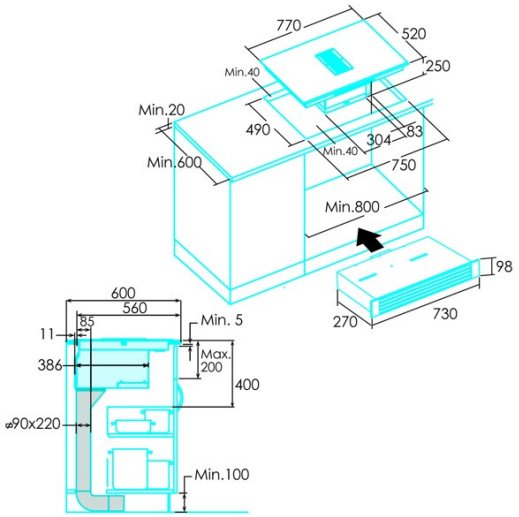

GENERAL INFORMATION

EAN/UPC	8422248109659
Subfamily	Flow-in

Product sheet

Number of cooking zones	4
Zone 1: Technology	Induction
Zone 1: Type of zone	Simple
Zone 1: Position	Front Right
Zone 1: Zone diameter (mm)	19
Zone 1: Power (kW)	2
Zone 1: Booster (kW)	28
Zone 1: Consumption (Wh / kg)	2068
Zone 2: Technology	Induction
Zone 2: Type of zone	Simple
Zone 2: Position	Rear Right
Zone 2: Zone diameter (mm)	19
Zone 2: Power (kW)	15
Zone 2: Booster (kW)	2
Zone 2: Consumption (Wh / kg)	1815
Zone 3: Technology	Induction
Zone 3: Type of zone	Simple
Zone 3: Position	Front Left
Zone 3: Zone diameter (mm)	19
Zone 3: Power (kW)	2
Zone 3: Booster (kW)	28
Zone 3: Consumption (Wh / kg)	1942
Zone 4: Technology	Induction
Zone 4: Position	Rear Left
Zone 4: Zone diameter (mm)	19
Zone 4: Power (kW)	15
Zone 4: Booster (kW)	2
Zone 4: Consumption (Wh / kg)	1815

Dimensions

Width (mm)	770
Height (mm)	250
Depth (mm)	520
Built-in width (mm)	750
Built-in depth (mm)	490
Easy installation system	Quick Fix

Control

Control type	Touch control
Power levels	9 + Booster
Knob type	N/A
Cooking time programming	√
Countdown alarm	√
Power management	-
Available power limits (kW)	No
Connectivity	No
Autoignition	220-240V

Safety

Safety lock	√
Child lock	No
Residual heat indicator	√
Automatic cookware detection	√
Smart cookware detection	-
Automatic safety shutdown	√

Electrical connection

Nominal voltage (V)	220-240
Nominal frequency (Hz)	50/60
Nominal input power (W)	9000